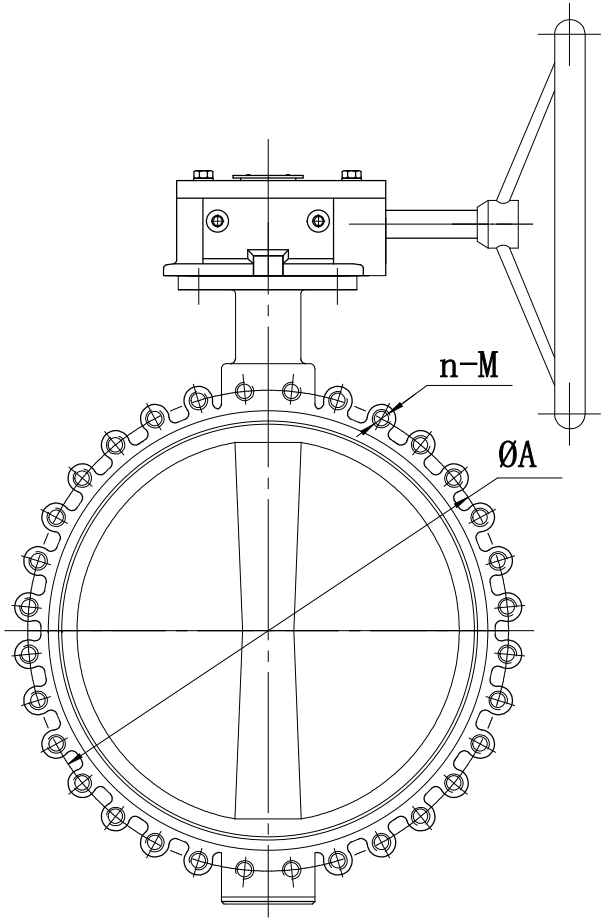

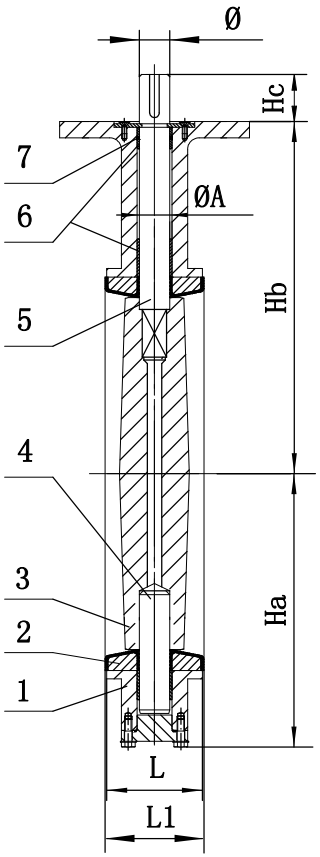

TOP FLANGE

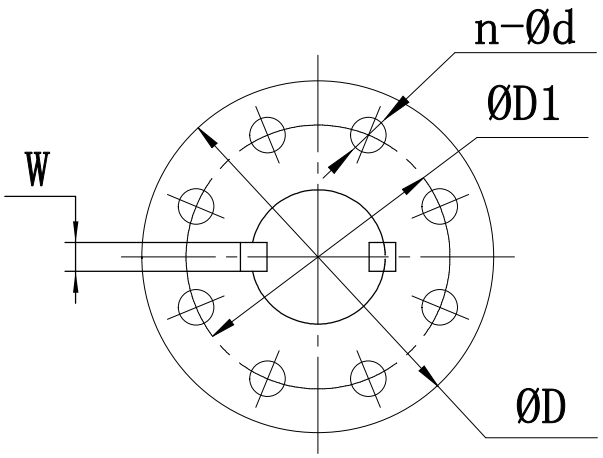

NO.	PARTS NAME	MATERIAL	QTY
7	O-RING	EPDM	1
6	BUSHING	BRASS	1
5	STEM	17-4 PH	1
4	STEM	17-4 PH	1
3	DISC	SS316	1
2	SEAT	EPDM	1
1	BODY	DI	1

TEST PRESSURE		SHELL	SEAL
	HYDROSTATIC	225 PSI	165 PSI
	AIR		

STANDARD		
	DESIGN CODE	API 609
	INSPECTION & TEST	API 598
	END STANDARD	ANSI B16.1
	FACE TO FACE	API 609

TITLE: LUG BUTTERFLY VALVE

APPROVED					REV
CHECKED		BFV VALVE			
DRAWN					
DESIGNED		SCALE		UNIT	mm
SIGNATURE					

SIZE	Ha	Hb	Hc	L	L1	ØA	n-M	D	D1	n-Ød	Ø	W
26″	450	520	75									