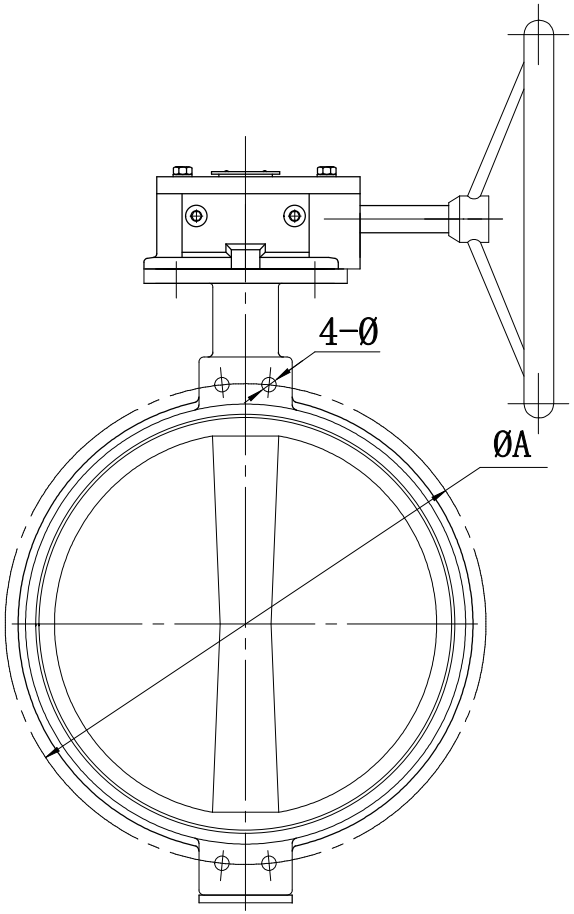

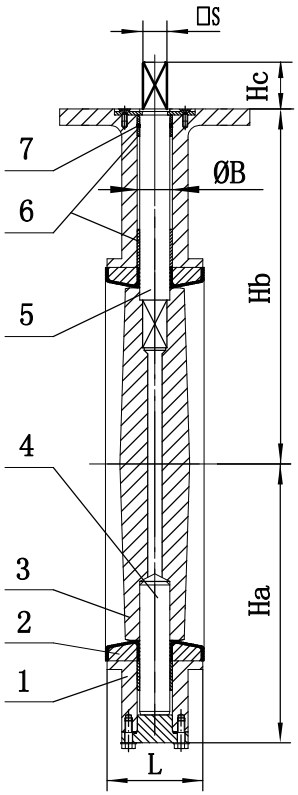

TOP FLANGE

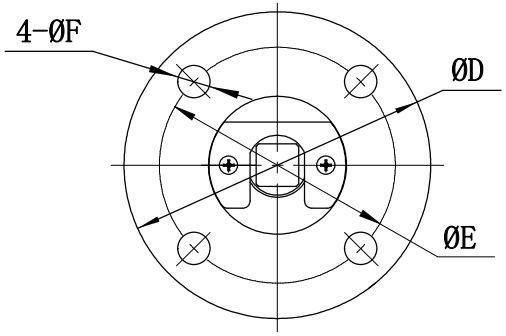

NO.	PARTS NAME	MATERIAL	QTY
7	O-RING	NBR	3
6	BUSHING	PTFE	1
5	STEM	17-4PH	1
4	STEM	17-4PH	1
3	DISC	SS316	1
2	SEAT	EPDM	1
1	BODY	SS316	1

TEST PRESSURE		SHELL	SEAL
	HYDROSTATIC	15 Bar	11 Bar
	AIR		

STANDARD		
	DESIGN CODE	API 609
	INSPECTION & TEST	API 598
	END STANDARD	ANSI B16.47-A
	FACE TO FACE	EN 558

TITLE: WAFER BUTTERFLY VALVE

APPROVED					REV
CHECKED		BFV VALVE			
DRAWN					
DESIGNED		SCALE		UNIT	mm
SIGNATURE					

SIZE	Ha	Hb	Hc	L	ØA	4-Ø	n-Holes of Flange	D	E	ØF	ØB	S
22″	410	475	70	1								